21RFP057 Internet Firewall Replacements
Attachment B
Installation / Configuration Instructions
Sample

Firewall Installation and Configuration Guide
Version 01, 11/14/2019

Revision History

Version number	Day Changed	Approved by	Brief description

Contents

1 Switch IOS Information 2

1.1 4500X switch 2

1.2 3850 switch 2

1.3 2960X Fan-less switch 4

2 4500X Switch hardware Installation and Configuration Procedures – Staging at the Warehouse 4

2.1 4500X Switch Hardware Information 4

2.2 Assemble, install and label 5

2.3 Power on and check the switch 5

2.4 Load IOS on the switch 5

2.5 Load Startup Configuration and Configure the Switch 5

2.6 4500X switch staging at warehouse completed - *Unofficial Checklist* 6

2.7 Installation and Configuration at the School Campus 7

2.8 Test and verify the correct power cord connection of the 4500X 7

2.9 Check Innovation Station VLAN (For campus network upgrade ONLY) 8

3 4500X Switch Checklist at the School Campus 8

3.1 4500X switch Checklist 8

4 3850 Switch Hardware Installation and Configuration Guideline 10

4.1 3850 Switch Hardware Information 10

4.2 3850 Switch Installation and Configuration Procedures – Staging at the Warehouse 10

4.3 Cat38XX switch staging at warehouse completed - *Unofficial Checklist* 13

4.4 Installation and Configuration at the School Campus: 14

4.5 3850 Switch Checklist at the School Campus 16

5 2960X Fan-less Portable Switch Hardware Installation and Configuration Guideline 19
5.1 2960X Switch Hardware Information 19
2960X Switch Installation and Configuration Procedures – Staging at the Warehouse 19
5.2 Cat2960X Staging at warehouse completed - *Unofficial Checklist:* 20
5.3 Installation and configuration at the School Campus 21
5.4 Test, Measure, and Document Optic power levels 22
6 Credentials for Contractor 23

1 Switch IOS Information

Note: Configuration example and commands for the IOS version at other part of this document may not correspond exactly to the version stated here.

1.1 4500X switch

- IOS version: as specified in the LAN sheet. Below is an example:
  1) **IOS File:** cat4500e-universalk9.SPA.03.05.01.E.152-1.E1.bin
  2) IOS File Directory:
  3) bootflash:cat4500e-universalk9.SPA.03.05.01.E.152-1.E1.bin
- You will need to verify/set the license boot level to ipbase

1.2 3850 switch

- IOS version: as specified in the LAN sheet. Below is an example:
  IOS File: cat3k_caa-universalk9.SPA.03.06.00.E.152-2.E.bin

- **IOS mode:** it could be INSTALL mode or BUNDLE mode, as specified in the LAN sheet.
- **License Level In Use:** ipbase, or LANbase, as specified in the LAN sheet.
- **License Level on Reboot:** ipbase, or LANbase, as specified in the LAN sheet.
  Check by command: switch#sh license right-to-use summary

A. IOS in INSTALL Mode:
After the IOS software installed, the following packages shows up in the flash or each switch:

```
cat3k_caa-base.SPA.03.06.00E.pkg
cat3k_caa-drivers.SPA.03.06.00E.pkg
cat3k_caa-infra.SPA.03.06.00E.pkg
cat3k_caa-iosd-universalk9.SPA.152-2.E.pkg
packages.conf
```

After the IOS software installed, check below items

1) Boot and run the IOS XE software in Install Mode (Default).

4)
5) Switch# sh ver | inc INSTALL
6) 1 56 WS-C3850-48P 03.06.00E cat3k_caa-universalk9 INSTALL
7) 2 56 WS-C3850-48P 03.06.00E cat3k_caa-universalk9 INSTALL
8) 3 56 WS-C3850-48P 03.06.00E cat3k_caa-universalk9 INSTALL
9)
2) The flash of each of the switch members must have a file named "packages.conf"
10)
3) Boot Variables
11) Each of the switch must have a boot variable "BOOT variable = flash:packages.conf;". See below for a 3-switch stack boot variables example:
12)

```
Switch#sh boot system
---------------------------
Switch 1
---------------------------
Current Boot Variables:
BOOT variable = flash:packages.conf;

Boot Variables on next reload:
BOOT variable = flash:packages.conf;
Allow Dev Key = yes
Manual Boot = no
Enable Break = no
---------------------------
Switch 2
---------------------------
Current Boot Variables:
BOOT variable = flash:packages.conf;

Boot Variables on next reload:
BOOT variable = flash:packages.conf;
Allow Dev Key = yes
Manual Boot = no
Enable Break = no
---------------------------
Switch 3
---------------------------
Current Boot Variables:
BOOT variable = flash:packages.conf;

Boot Variables on next reload:
BOOT variable = flash:packages.conf;
Allow Dev Key = yes
Manual Boot = no
Enable Break = no
```

1.3 2960X Fan-less switch

IOS version: as specified in the LAN sheet. Below is an example:

IOS File: c2960x-universalk9-tar.152-2.E.tar
IOS File Directory: flash:/ c2960x-universalk9-tar.152-2.E/ c2960x-universalk9-tar.152-2.E.bin

2 4500X Switch hardware Installation and Configuration Procedures – Staging at the Warehouse

2.1 4500X Switch Hardware Information

1. Parts and Part Numbers

Parts	Part Numbers
Base systems	WS-C4500X-16SFP+ OR WS-C4500X-32SFP+
Expansion Module	C4KX-NM-8SFP+
Optics	SFP-10G-SR= : (For multimode connections to local campus switches) SFP-10G-LR: (For single mode connections to the GAATN metro fiber network)

Note: 10G SFP+ Twinax cables may use to connect the Aruba Controller and 3850 switch stacks to the 4500X switch in the MDF.

2. Chassis and Module location

4500X base system	**WS-C4500X-16SFP+**
module 1	**WS-C4500X-16SFP+**
module 2	

4500X base system	**WS-C4500X-16SFP+ with module2**
module 1	**WS-C4500X-16SFP+**
module 2	**C4KX-NM-8SFP+**

4500X base system module	**WS-C4500X-32SFP+**
module 1	**WS-C4500X-32SFP+**

4500X base system module	**WS-C4500X-32SFP+**
module 2	

4500X base system	**WS-C4500X-32SFP+ with module2**
module 1	**WS-C4500X-32SFP+**
module 2	**C4KX-NM-8SFP+**

2.2 Assemble, install and label

1) Install and secure Line Card modules and power supplies to the chassis according to design. Note that the switch will have dual power supplies (PS).
2) DO NOT insert the Optics yet; these parts are easy to damage in transit, and should only be installed after the hardware has been racked and installed at the school campus.
3) Switch labeling: label the switch as xyzc4X01, where xyz is the campus number.
4) Asset tag placement: according to AISD WAN Network Labeling Standard.
5) Power cable labeling according to AISD WAN Network Labeling Standard.

2.3 Power on and check the switch

1) Check and verify the switch power-on self-test (POST) is successful. Check messages and switch log for abnormal activities and errors.
2) Show module to verify all the installed modules are in working condition without any errors.
3) Check all LED indicators and make sure there are no abnormal conditions.

2.4 Load IOS on the switch

IOS version: As specified in the AISD provided campus LAN.Install.xlsx excel workbook.

1) Set configuration register to **0x2102** if it is not the factory default.
2) Load IOS to switch bootflash:
   NOTE: you can copy the IOS file from the USB flash to the bootflash:
   13) Specify the system image that the router loads at startup, use one the following boot system global configuration commands.
   c4X01(config)#boot system flash bootflash:cat4500e-universalk9.SPA.03.05.01.E.152-1.E1.bin
3) Perform a "wr mem" or "copy run start"
4) Reload the switch, then check and make sure the switch boots to the right IOS version.

2.5 Load Startup Configuration and Configure the Switch

Note:

✓ There will be TWO customized configuration files is provided by AISD.

- ✓ The first one is a pre-config file consisting of a few commands that are intended to be copy-and-pasted directly from that file into the switch in global configuration mode. This pre-config file prepares the switch to be configured from the master config file.
- ✓ The other one is the master configuration file, it will be copied to the startup configuration of the switch via USB flash or TFTP. **Don't copy-and-paste the master config to the switch!**

A. Copy the appropriate pre-config file to the switch

1) Load the appropriate pre-config file titled <switch-num>c4X01_pre.cfg (e.g. **252c4X01_pre.cfg**) into a text editor.
2) Select all the text in the file and copy it to the clipboard
3) Enter configuration mode on the switch and paste the clipboard contents in. This will set up the vtp information, and create a crypto key.

14)

B. Load the master configuration files to start-up configuration of the switch

a. Via USB flash – recommended method

1) Copy the master configuration file to your USB flash.
2) Insert the USB flash to the switch USB port
3) Check the directory name of the flash, and copy the master configuration file of the flash directory to the start-up configuration. Below is an example of the USB directory usbflash0: and the master configuration file is 252c4X01.cfg

15) Switch#copy usbflash0:/ 252c4X01.cfg startup-config
16) NOTE: DO NOT perform the "**wr mem**" or "**copy run start**" commands yet!

4) Perform a "**reload**" on the Cat 4500X.
5) The Cat4500X should reboot and load the correct configuration.

b. Via TFTP Server

1) Copy the master configuration file to your TFTP server.
2) Establish a connection from your TFTP server to the switch.
3) Use the below command to copy to master configuration file to the switch

17) Switch#copy tftp startup-config
18) NOTE: DO NOT perform the "**wr mem**" or "**copy run start**" commands yet!

4) Perform a "**reload**" on the Cat 4500X.
5) The Cat4500X should reboot and load the correct configuration.

19)

C. Store the AISD Asset Tag number at the switch configuration

20)

1) After rebooting, within the global configuration on the Cat4500X, store the AISD Asset Tag number in the "snmp contact" field:

   *XYZ*c4X01(config)# **snmp-server contact** *[#AssetTag#]*

2) On the Cat4500X, copy the running configuration to startup configuration.

2.6 4500X switch staging at warehouse completed - *Unofficial Checklist*

The below table is an Unofficial Checklist, to be performed after staged at warehouse

Action	Command	Verification	OK?
Check hardware configuration	**show module**	Ensure that appropriate modules are all in correct slots, and all show "**Status: OK**"	
Check for POST failures	**show log**	Ensure that no hardware failures are reported	
Check IOS	**show version**	boot image should be on slot0 and bootblash.	
Check that pre-config file was copied and pasted successfully	**show vtp status** **show vlan** **show crypto key mypubkey rsa**	VTP domain should be set, mode should be transparent, VLANs in the 300s, 501 and 600s should be configured A crypto key should be displayed in the output	
Check that master config file was copied successfully via TFTP	**Show ip int brief** **Show int status**	VLAN interfaces (SVI) should be configured in 300s, 501, 600s, and should show Status/Protocol = "Up/Up" Configured downlink switchports should have correct description	
Asset tag set	**show snmp contact**	Should be set to AISD Asset Tag number	
Configuration is saved	**copy run start** <or> **wr mem**	Save it once more to be sure	

2.7 Installation and Configuration at the School Campus

1) Mount the switch on the rack according to design proved or approved by AISD.
2) Insert Optic SFP-10GBase-SR as designed.
3) Make connections to RPR, MDF/IDF access switches, portable access switches as design.
4) Migrate connections from the current 4K switch to the 4500X switch: the access switch for Radmux, and the Aruba controller, etc. Use new .50 micron fiber jumpers to all new switches. Note: video camera will migrate to access switch 3850.
5) Label the inter-connection cables according to AISD WAN Network Labeling Standard.
6) Connect 4500X PS1 to UPS, PS2 to house power.
7) Label the power cords according to AISD WAN Network Labeling Standard.
8) Power on the switch.

2.8 Test and verify the correct power cord connection of the 4500X

Unplug one of the power cords, then check the switch with the following command, make sure the command output has indicate the DOWN power supply with a Status BAD

```
188c4X01#sh env | be Power
Power                    Fan              Inline
Supply Model No          Type          Status          Sensor          Status
------  ----------------  ---------  -----------  -------  -------
PS1     PWR-C4KX-750AC-R  AC 750W      good    bad      n.a.
PS2     PWR-C4KX-750AC-RAC      750W  good    good    n.a.
```

2.9 Check Innovation Station VLAN (For campus network upgrade ONLY)

After finishing configuring access ports for the innovation stations, Go to the 4K and make sure all the mac address with "0011.0230." are in VLAN 350, if not, you need to trace down to the access switch port and configure the port with the macro for innovation station. Below example shows the first mac address is in VLAN 305, which has to be corrected to VLAN 350.

007c4X01#sh mac add | inc 0011.0230

305	**0011.0230.0619**	**dynamic ip,ipx,assigned,other Port-channel13**
350	0011.0230.06af	dynamic ip,ipx,assigned,other Port-channel13
350	0011.0230.06b0	dynamic ip,ipx,assigned,other Port-channel5
350	0011.0230.06b1	dynamic ip,ipx,assigned,other Port-channel3

3 4500X Switch Checklist at the School Campus

Capture the console log showing the following commands. Email the log to wananalysts@austinisd.org.

3.1 4500X switch Checklist

	Action	Check
show version	Document output	Have the right IOS version and image. Which specified at the excel spreadsheet.
Check IOS file location	Document output	Make sure the current IOS file located on bootflash
show interface transceiver	Document output	Make sure all the 10 G links Optics Power Levels are within the normal range.
show module	Document output	Make sure all the modules' status is "OK"
show vlan	Check output	VLANs in the 300s, 501 and 600s should be configured
show ip int brief	Check output	VLAN interfaces in the 300s, 501, and 600s should have IPs
sh etherchannel summary	Check output	Should match AISD campus network design, and active ports in etherchannels are active.
sh interface status	Check output	Switchports should have correct descriptions
sh interface trunk	Check output	Should match AISD campus network design
sh cdp neighbor	Check output	Should match AISD campus network design
SSH to the device	Check SSH connection	While you are in the device console, enter command "ssh 10.xyz.255.1", provide the user name contractorID1's credentials. Note that you only need a password if you already logon the switch.

Note:You need to check and make sure the levels meet the below level. If not, investigation is needed:

Optical Transmit Power > -4dBm

Optical Receive Power > -6dBm

NOTE: If you need to start over from scratch and reload a completely new configuration on a Cat45XX, the following commands may be used to thoroughly delete the current configuration and return to factory defaults.

Switch# **erase startup-config** ! *Will not* erase VTP/VLAN info, SNMP ifIndexes, or crypto.
See below.

Switch# **erase cat4000_flash:** ! Removes the VLAN.DAT file to delete all VTP and VLAN info

Switch# **delete nvram: ifIndex-table.gz** ! Removes all SNMP ifIndexes – *important if you've added and removed line cards*

Switch(config)#**crypto key zeroize rsa** <switch hostname>**-rsakey** ! Erases crypto key

4 3850 Switch Hardware Installation and Configuration Guideline

4.1 3850 Switch Hardware Information

Switch model: WS-C3850-48P-S
Switch power Supply: PWR-C1-715WAC=
Switch module: C3850-NM-2-10G

Catalyst 3850 Stack Power cable type:

1) CAB-SPWR-30CM: 0.3 meter
2) CAB-SPWR-150CM: 1.5 meter

Catalyst 3850 Stack Data cable type:

1) STACK-T1-50CM: 0.3 meter
2) CAB-SPWR-150CM=: 1.5 meter

Optics: SFP-10GBase-SR

Note: Use 10G SFP+ Twinax cables for the 3850 switch stacks to the 4500X switch in the MDF.

4.2 3850 Switch Installation and Configuration Procedures – Staging at the Warehouse

1. **Assemble and check the hardware** *(do not plug the C3850-NM-2-10G modules in yet!)*

1) Install a power supply to the first power supply slot of each and every switch. The last switch of the power stack has two power supplies. See Table 1: Data Stack Cabling and Power Stack Cabling and Power Supply Configurations - AISD Design for detail.
2) Connect the switches together into a stack according AISD design. To create a switch stack, see Table 1 “Data Stack and Power Stack Cabling Configurations”.
3) You can wait on the C3850-NM-2-10G switch modules; you don’t yet know which switches to install them in. They will be installed later in the staging process.
4) Power on all of the switches in a stack within 1 minute so that all the switches can participate in the master election.
5) After the Stack has powered on and has finished booting up for the first time, connect a console cable to the console port on the Stack Active Member. The Stack Active Member has a solid green LED light on the front bezel of the switch.
6) Check and verify the switch stack power-on self-test (POST) is successful:

   Switch# **show post**

7) Check messages and switch log for abnormal activities and errors.
8) “**Show switch**” to verify all the switches in a stack are in the working condition without any errors.

9) Check all the switch LED indicators and make sure there are no abnormal conditions.
10) Check the number of each switch by pressing the "mode" button on the front of each switch. Pressing the "Mode" button will cycle through the display modes of the LEDs. When you select the "STACK" mode, one of the first few link lights (1 – 6) on each switch will illuminate, indicating the stack number that is assigned to each switch.
11) After checking the number on the switches, renumber them as appropriate such that the first switch (top) in the stack (with the network module) is numbered 1 and last switch (bottom, also with a network module) is numbered with the highest number in the stack. For example, in a stack of four switches the highest-numbered switch in the stack (which also has the other 10G module) should be numbered 4.

    Switch# show switch
    Switch# switch <current-number> renumber <new-number>

    Note: After the above command is entered, the numbers will NOT change until after a reboot. However, you can save time by not rebooting yet.

12) After the switches have been renumbered, but before rebooting, set the stack priority for the top switch in the stack to "10", and set the stack priority for the bottom switch in the stack to "9" with the following command. Remember that the switch numbers have not been renumbered, so continue using the old numbers:

    Switch# switch <current-number-of-top-switch> priority 10
    Switch# switch <current-number-of-bottom-switch> priority 9
    Switch# write

13) Label or tag each switch according to the switch number learned in the previous step. You may not wish to apply the final label to the first and last switch yet, since the C3850-NM-2-10G modules are not yet installed, and the label will end up being affixed to the bezel of those modules.

2. Check IOS of the switch stack and upgrade IOS if it is not the right version

System image file is specified at the provided LAN Install.xlsx.

1) Keep the manufacturer default configuration register.
2) Make sure each of the switches has the same image file and the same file structure.

3. Load Startup Configuration and Configure the Switch Stack

Note:

- ✓ There will be TWO customized configuration files is provided by AISD.
- ✓ The first one is a pre-config file consisting of a few commands that are intended to be copy-and-pasted directly from that file into the switch in global configuration mode. This pre-config file prepares the switch to be configured from the master config file.
- ✓ The other one is the master configuration file, it will be copied to the startup configuration of the switch via USB flash or TFTP. **Don't copy-and-paste the master config to the switch!**

A. Copy the appropriate pre-config file to the switch stack

1) Load the appropriate pre-config file titled <switch-num><closet>38<num>_pre.cfg (e.g. 252A3801_pre.cfg) into a text editor.
2) Select all the text in the file and copy it to the clipboard
3) Enter enable mode on the switch and paste the clipboard contents in. This will set up the switch member priorities, vtp information, and create a crypto key.

B. Load the master configuration files to start-up configuration of the switch stack

c. Via USB flash – recommended method

1) Copy the master configuration file to your USB flash.
2) Insert the USB flash to the Active Switch Member USB port
3) After console in the switch stack, check the directory name of the flash, and copy the master configuration file of the flash directory to the start-up configuration. Below is an example of the USB directory usbflash0: and the master configuration file is 252A3801.cfg

   Switch#copy usbflash0:/ 252A3801.cfg startup-config
   NOTE: DO NOT perform the "**wr mem**" or "**copy run start**"!

4) Power down the Cat38XX stack by unplugging all power cables. You do not need to re-cable any power stack cables or data stack cables. Though the switches came up with arbitrary numbering, you can leave them sitting in that order during staging.
5) The switch stack should reboot and load the correct configuration.

C. Via TFTP Server

1) Copy the master configuration file to your TFTP server.
2) Establish a connection from your TFTP server to the switch stack.
3) Use the below command to copy to master configuration file to the switch stack

   Switch#copy tftp startup-config
   NOTE: DO NOT perform the "wr mem" or "copy run start"!

4) Power down the Cat38XX stack by unplugging all power cables. You do not need to re-cable any power stack cables or data stack cables. Though the switches came up with arbitrary numbering, you can leave them sitting in that order during staging.
5) The switch stack should reboot and load the correct configuration.

4. Completing the staging process: Labeling and Customization

1) While the stack is powered off, install the C3850-NM-2-10G switch modules in the first and last switch in the stack. These should have been tagged/identified earlier in an earlier step. *However, don't install the little SFP modules yet…wait until the switches reach the campus, as the SFPs are easy to damage in transit.*
2) Power the whole Switch Stack back on by reconnecting all the power cables
3) Switch labeling: While the stack is booting up, label each of the switches as xyzA38mn-N, where "N" is the switch member number of the stack, and "xyzA38mn" is the hostname for the stack. See AISD Label standard for detail. The switch numbers should have been tagged/identified earlier in an earlier step.

4) Asset tag placement: according to AISD specs.
5) Label the power cables according to AISD specs.
6) After the switch stack is back online, it should be fully configured, and there should be no need to remove any parts of the configuration.
7) Start a new console session. Within the global configuration on the Cat3850, store the AISD Asset Tag number in the "snmp contact" field:
8) XYZA3801(config)# **snmp-server contact** [#1-AssetTag,2-AssetTag…6-AssetTag,#]
9) List all the switch member asset tag numbers to [#1-AssetTag,2-AssetTag…6-AssetTag,#].eg, a stack has two members, switch 1 asset tag is 4646464, switch 2 asset tag is 5757575, the command will be **snmp-server contact 1-4646464,2-5757575**
10)
11) Copy the running configuration to startup configuration:
12) "**copy run start**" <or> "**wr mem**"

4.3 Cat38XX switch staging at warehouse completed - *Unofficial Checklist*

(official checklist is performed and captured at Campus)

Action	Command	Verification	OK?
Check hardware configuration	**Show switch detail**	Ensure that all appropriate switches are present, and all stack ports show "**Status: OK**"	
Check for POST failures	**show log**	Ensure that no hardware failures are reported	
Check IOS – INSTALL MODE	**1) show version** **2) sh ver | inc INSTALL** 3) **show boot system**	✓ IOS version should be the same as stated in the LAN install sheet. ✓ Image is installed with "INSTALL" mode. ✓ System image file is "flash:packages.conf"	
Check that pre-config file was copied and pasted successfully	**1) show vtp status** **2) show vlan** **3) show crypto key mypubkey rsa**	✓ VTP domain should be set, mode should be transparent, VLANs in the 300s, 501 and 600s should be configured ✓ A crypto key should be displayed in the output	
Check that master config file was copied successfully via TFTP	**1) Show ip int brief** **2) Show int status** 3) **Show ip default-gateway**	✓ There should be one management IP interface set up on VLAN 501, with a correct IP address ✓ Configured uplink switchports should have correct descriptions. User access ports should be defaulted to VLAN 305. ✓ There should be one default gateway configured	
Asset tag set	**show snmp contact**	Should be set to AISD Asset Tag number(s)	
Configuration is saved	**copy run start** <or> **wr mem**	Save it once more to be sure	

5. 3850 Staging at warehouse completed

4.4 Installation and Configuration at the School Campus:

1) Mount all the switches of the stack on the rack according to design provided by AISD. Start with the switch with member number 1 (xyzA38mn-1) on the top of the rack, then xyzA38mn-2…, sequentially.
2) Connect the switches together into a stack according AISD design. See Table 1 for Data Stack and Power Stack Cabling Configurations for creating a switch stack. (You must secure the connection to power stack and data stack ports!)
3) Insert Optic SFP-10GBase-SR (little SFP module) to the specified Ten-Gig ports, Te1/1/3 of the first switch, and TeX/1/3 of the last switch of the stack.
4) Cable the inter-switch connections based on AISD design.
5) Label the inter-switch cables according to AISD specs.
6) Power cord connection: each of the switches in a stack must have its power cord plugged in the power source.
   MDF: connect all the switch power cords of the stack to UPS.
   IDF: connect all the switch power cords of the stack to house power.
7) Make sure that all power cords are labeled according to AISD specs.
8) Power on all of the switches in a stack.
9) Press the mode button of the switch and double check each of the switch numbers, make sure the switch has the right label with number.
10) **Consistent ifindex across different 3850 switch stacks**
    If whatsup detects one or more of the following active monitors down, and you have verified from the switch that the interface(s) actually are up, check the switch interface index by command "show snmp mib ifmib ifindex", if the Ifindex doesn't match the below table, you will need to copy the AISD provided **x**sw_ifIndex-table file (where x is the number of switches in the stack) to the stack nvram.

AISD Whatsup Gold Active Monitor Name	Switch Interface Name	SNMP Ifindex	Notes
Cisco3850-2sw-Po1	Port-channel1	122	monitor for a 2-switch stack
Cisco3850-3sw-Po1	Port-channel1	181	monitor for a 3-switch stack
Cisco3850-4sw-Po1	Port-channel1	240	monitor for a 4-switch stack
Cisco3850-5sw-Po1	Port-channel1	299	monitor for a 5-switch stack
Cisco3850-6sw-Po1	Port-channel1	299	monitor for a 6-switch stack
Cisco3850-StackSub-St1-1	StackSub-St1-1	60	monitor for 2, 3,4,5,6-switch stacks
Cisco3850-StackSub-St1-2	StackSub-St1-2	61	monitor for 2, 3,4,5,6-switch stacks
Cisco3850-StackSub-St2-1	StackSub-St2-1	119	monitor for 2, 3,4,5,6-switch stacks
Cisco3850-StackSub-St2-2	StackSub-St2-2	120	monitor for 2, 3,4,5,6-switch stacks
Cisco3850-StackSub-St3-1	StackSub-St3-1	178	monitor for 3,4,5,6-switch stacks
Cisco3850-StackSub-St3-2	StackSub-St3-2	179	monitor for 3,4,5,6-switch stacks
Cisco3850-StackSub-St4-1	StackSub-St4-1	237	monitor for 4,5,6-switch stacks
Cisco3850-StackSub-St4-2	StackSub-St4-2	238	monitor for 4,5,6-switch stacks
Cisco3850-StackSub-St5-1	StackSub-St5-1	296	monitor for 5,6-switch stacks
Cisco3850-StackSub-St5-2	StackSub-St5-2	297	monitor for 5,6-switch stacks
Cisco3850-StackSub-St6-1	StackSub-St6-1	358	monitor for a 6-switch stack ONLY
Cisco3850-StackSub-St6-2	StackSub-St6-2	359	monitor for a 6-switch stack ONLY

AISD Whatsup Gold Active Monitor Name	Switch Interface Name	SNMP Ifindex	Notes
Cisco3850-Te1/1/3	TenGigabitEthernet1/1/3	57	monitor for 1,2, 3,4,5,6-switch stacks
Cisco3850-Te1/1/4	TenGigabitEthernet1/1/4	58	monitor for 1-switch ONLY
Cisco3850-Te2/1/3	TenGigabitEthernet2/1/3	116	monitor for a 2-switch stack ONLY
Cisco3850-Te3/1/3	TenGigabitEthernet3/1/3	175	monitor for a 3-switch stack ONLY
Cisco3850-Te4/1/3	TenGigabitEthernet4/1/3	234	monitor for a 4-switch stack ONLY
Cisco3850-Te5/1/3	TenGigabitEthernet5/1/3	293	monitor for a 5-switch stack ONLY
Cisco3850-Te6/1/3	TenGigabitEthernet6/1/3	355	monitor for a 6-switch stack ONLY

Note: the above table will be updated with 5-switch and 6-switch monitor information.

Commands to correct the ifindex inconsistent problem (below command shows an example of two-switch stack):

a) Remove the switch command "snmp ifmib ifindex persist"
   2-Switch-Stack(config)# no snmp ifmib ifindex persist
   2-Switch-Stack#write
b) Copy the AISD provided xsw_ifIndex-table file to stack nvram, reload the stack.
   2-Switch-Stack#copy tftp://10.240.9.10/2sw_ifIndex-table nvram:/ifIndex-table
   2-Switch-Stack#reload
c) When the stack comes back from reloading, check Whatsup and make sure all monitors are up, then apply command "snmp ifmib ifindex persist"
   2-Switch-Stack(config)#snmp ifmib ifindex persist
   2-Switch-Stack#write

11) Check whatsup and make sure all the monitors for the stack are up. AISD support staff should be available to help the checking and troubleshooting if you need help.

12) Set any ports necessary for security camera, UPS management ports, etc., and add descriptions for these ports. **(For campus upgrade ONLY)**
To achieve this, you will need to save the vlan number and description from the port on the old switch that served the device.
Note: you must configure the port back to default interface configuration before applying macro.

```
(config)# default interface g1/0/32
(config)# int g1/0/32    <whatever port is appropriate>
(config-if)# macro apply 38-access-no-voi  $desc "e.g. deviceName,IP"  $vid <vlan-id>
```

13) Set any ports necessary for Wireless AP, and add descriptions for these ports. To achieve this, you will need to save the vlan number and description from the port on the old switch that served the device. Note that the campus may have Aruba and/or Cisco AP, and they are configured differently.
Note: you must configure the port back to default interface configuration before applying macro.

```
For Aruba AP:
(config)# default interface g3/0/20
(config)# int g3/0/20    <whatever port is appropriate>
(config-if)# macro apply 38-access-ap  $desc "e.g. AP-name,Drop,location"
```

14) Write the configuration: "**copy run start**"

4.5 3850 Switch Checklist at the School Campus

Capture the console log showing the following commands. Email this to wananalysts@austinisd.org.

3850 Switch Stack Checklist

	Action	Check
show version	Document output	Have the right IOS version and image on all the switches
show interface transceiver	Document output	Make sure all the 10 G links Optics Power Levels are within the normal range.
show boot system	Document output	For INSTALL mode, Each of the switch must have a boot variable "BOOT variable = flash:packages.conf;". For BUNDLE mode, Each of the switch must have a boot variable to the current .bin IOS file.
sh ver | inc INSTALL	Document output	Make sure IOS is in the INSTALL mode
show switch	Document output	Make sure all the switches are in the "OK" state.
show switch stack-ports	Document output	Make sure all the switch stack ports are in the "OK" state.
show env stack	Document output	Make sure all the switches: FAN 1 is OK FAN 2 is OK PS-FAN1 is OK TEMPERATURE is OK Temperature State: GREEN POWER is OK
show switch neighbors	Document output	Compare Data in table 1.
show etherchannel summary		Make sure both Ten-gig ports are up and bundled at Po1.
show vlan	Check output	VLANs in the 300s, 501 and 600s should be configured
show rmon alarms	Check output	There should be 2 alarms configured
show interfaces status	Check output	Switchports should have correct descriptions
show interface trunk		
show cdp neighbor		
Sh log		Troubleshoot abnormal log message and drive for resolution with AISD.
SSH to the device	Check SSH connection	While you are in the device console, enter command "ssh 10.xyz.240.1nm", provide the user name contractorID1's credentials.
Connectivity Testing (Wired)		Connect your laptop to an access port in VLAN305, verify that the laptop gets a DHCP address, and can access the network.

	Action	Check
Connectivity Testing (Wireless)		Set your laptop to connect to AISD wireless network guest. Verify that the laptop gets a DHCP address, and can access the network via wireless.

Table 1: Data Stack Cabling and Power Stack Cabling and Power Supply Configurations - AISD Design

Number of Swith in a stack	**Command Output of "show switch neighbors" – Data stack port connection**	**Data Stack Cabling and Power Stack Cabling Configurations**	**Power Supply**
1 switch	NA	NA	Two PSs on switch 1
2 switches in a Data Stack	xyzA38mn #sh switch neighbors Switch #Port 1 Port 2 -------- ------ ------ 1 2 2 2 1 1		One PS on switch 1 Two PSs on switch 2
3 switches in a Data Stack	xyzA38mn #sh switch neighbors Switch #Port 1 Port 2 -------- ------ ------ 1 3 2 2 1 3 3 2 1	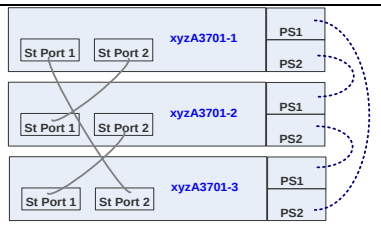	One PS on switch 1 One PS on switch 2 Two PSs on switch 3
4 switches in a Data Stack	xyzA38mn #sh switch neighbors Switch #Port 1 Port 2 -------- ------ ------ 1 4 2 2 1 3 3 2 4 4 3 1	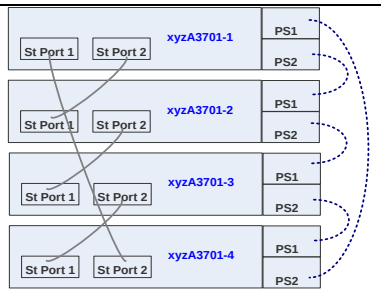	One PS on switch 1 One PS on switch 2 One PS on switch 3 Two PSs on switch 4
5 switches in a Data Stack	xyzA38mn #sh switch neighbors Switch #Port 1 Port 2 -------- ------ ------ 1 5 2 2 1 3 3 2 4 4 3 5 5 4 1	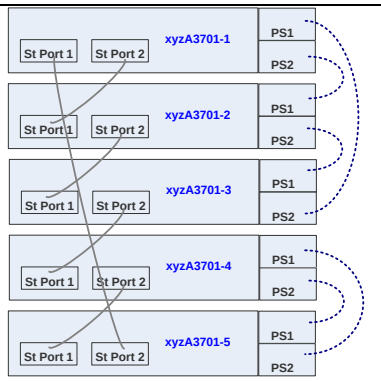	One PS on switch 1 One PS on switch 2 Two PSs on switch 3 One PS on switch 4 Two PSs on switch 5
6 switches in a Data Stack	xyzA38mn #sh switch neighbors Switch #Port 1 Port 2 -------- ------ ------ 1 6 2 2 1 3 3 2 4 4 3 5 5 4 6 6 5 1	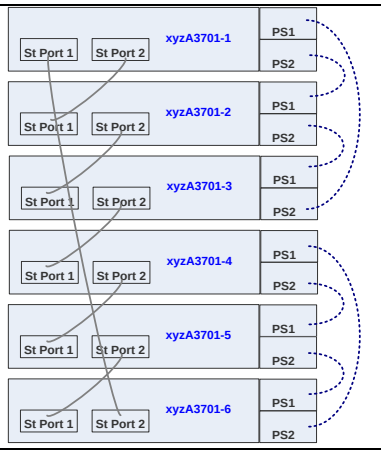	One PS on switch 1 One PS on switch 2 Two PSs on switch 3 One PS on switch 4 One PS on switch 5 Two PSs on switch 6

5 2960X Fan-less Portable Switch Hardware Installation and Configuration Guideline

5.1 2960X Switch Hardware Information

WS-C2960X-24PSQ-L

1) Port Gi0/1 – 8 are PoE ports, the first two ports will assign to Access Point (AP), the other 6 ports will reserved for devices required PoE power, such as security camera, VoIP phones, etc.
2) Port Gi0/27 – Uplink to upstream switch.
3) Optics: 1000BaseSX SFP, DOM

2960X Switch Installation and Configuration Procedures – Staging at the Warehouse

1. Assemble and check the hardware

1) Power on the switch, check and verify the switch power-on self-test (POST) is successful: Switch# **show post**
2) Check messages and switch log for abnormal activities and errors.
3) Check all the switch LED indicators and make sure there are no abnormal conditions.

2. Check IOS of the switch

1) System image file is installed at the flash.
   Note: Keep the manufacturer default configuration register: 0xF

3. Label the Switch and Place AISD Asset Tag

According to AISD WAN Network Labeling Standard.docx

4. Load Startup Configuration and Configure the Switch

Note:

- ✓ There will be TWO customized configuration files is provided by AISD.
- ✓ The first one is a pre-config file consisting of a few commands that are intended to be copy-and-pasted directly from that file into the switch in global configuration mode. This pre-config file prepares the switch to be configured from the master config file.
- ✓ The other one is the master configuration file, it will be copied to the startup configuration of the switch via USB flash or TFTP. **Don't copy-and-paste the master config to the switch!**

A. Copy the appropriate pre-config file to the switch

1) Load the appropriate pre-config file titled <switch-num>P2Xyz_pre.cfg (e.g. **252P2X61_pre.cfg**) into a text editor.
2) Select all the text in the file and copy it to the clipboard

3) Enter configuration mode on the switch and paste the clipboard contents in. This will set up the vtp information, and create a crypto key.

15)

B. Load the master configuration files to start-up configuration of the switch

a. Via USB flash – recommended method

1) Copy the master configuration file to your USB flash.
2) Insert the USB flash to the switch USB port
3) Check the directory name of the USB flash, and copy the master configuration file of the flash directory to the start-up configuration. Below is an example of the USB with directory named usbflash0: and the master configuration file is 252P2X61.cfg

Switch#copy usbflash0:/ 252P2X61.cfg startup-config
NOTE: DO NOT perform the "**wr mem**" or "**copy run start**" commands yet!

4) Perform a "**reload**" on the Cat2960X.
5) The Cat4500X should reboot and load the correct configuration.

b. Via TFTP Server

1) Copy the master configuration file to your TFTP server.
2) Establish a connection from your TFTP server to the switch.
3) Use the below command to copy to master configuration file to the switch
Switch#copy tftp startup-config
NOTE: DO NOT perform the "**wr mem**" or "**copy run start**" commands yet!
4) Perform a "**reload**" on the Cat2960X.
5) The Cat2960X should reboot and load the correct configuration.

16)

C. Store the AISD Asset Tag number at the switch configuration

17)

3) After rebooting, within the global configuration on the Cat2960X, store the AISD Asset Tag number in the "snmp contact" field:

252P2X61(config)# **snmp-server contact** *[#AssetTag#]*

4) On the Cat2960X, copy the running configuration to startup configuration.

5.2 Cat2960X Staging at warehouse completed - *Unofficial Checklist:*

(official checklist is performed and captured at Campus)

Action	Command	Verification	OK?
Check for POST failures	**show log**	Ensure that no hardware failures are reported	
Check IOS	**show version**	boot image should be the one specified in LAN Install sheet.	
Check that pre-config file was copied and pasted successfully	**show vtp status** **show vlan** **show crypto key mypubkey rsa**	VTP domain should be set, mode should be transparent, VLANs in the 300s, 501 and 600s should be configured A crypto key should be displayed in the output	

Action	Command	Verification	OK?
Check that master config file was copied successfully via TFTP	**Show ip int brief** **Show int status** **Show ip default-gateway**	There should be one management IP interface set up on VLAN 501, with the correct IP address set Configured uplink switchports should have correct descriptions. User access ports should be defaulted to VLAN 305. There should be one default gateway configured	
Asset tag set	**show snmp contact**	Should be set to AISD Asset Tag number(s)	
Configuration is saved	**copy run start** <or> **wr mem**	Save it once more to be sure	

5.3 Installation and configuration at the School Campus

1) Port assignment and Patch
   Gi0/1-2: for Access ports
   Gi0/3-4: for devices requires PoE power.
   Gi0/9-24: for end user equipment without PoE
   Gi0/27: for Active fiber uplink to 4500X switch.

2) ***Verify that the fiber link will come up before mounting the switch.***
   a. ***There may be issues with the links from the portables.***
   b. Connect the uplink cable to switch port Gi0/27
   c. If the link comes up, make a console connection, ping the 4500X
   d. Connect to an access port and verify internet access is working.
   e. From the 4500X console, check this link for interface errors which may indicate link problems.
   f. ***If the link does not come up, use the LX/LH optics with mode conditioning patch cables to make the link. Then repeat steps c-e.***
3) Mount the switch to the portable classroom location according to AISD Guideline.
4) Connect the uplink cable to switch port Gi0/27
5) Set ports necessary for Wireless AP, and add descriptions for these ports. To achieve this, you will need to save the vlan number and description from the port on the old switch that served the device. Note that the campus may have Aruba and/or Cisco AP, and they are configured differently.
   Note: you must configure the port back to default interface configuration before applying macro.
   18)
   - For Aruba AP:
     (config)# default interface g0/1
   19) (config)# int g0/1 <whatever port is appropriate>
   20) (config-if)# **macro apply 29-access-ap $desc** "*e.g. AP-name,Drop,location*"

- For Cisco AP:
  (config)# default interface g0/2

21) (config)# int g0/2 <whatever port is appropriate>
22) (config-if)# **macro apply 29-old-cisco-ap $desc** "*e.g. AP-name,Drop,location*"
23)

6) Write the configuration: "**copy run start**" <or> "**wr mem**"

5.4 Test, Measure, and Document Optic power levels

I. Cat2960X Switch Checklist at the School Campus
Capture the console log showing the following commands. Email this to wananalysts@austinisd.org.

Cat2960s Switch Checklist

	Action	**Check**
show version	Document output	Have the right IOS version and image on the switch
sh vlan	Check output	VLANs in the 300s, 501 and 600s should be configured
sh interfaces status	Check output	Switch ports should have correct descriptions
sh interface trunk		
sh cdp neighbor		
sh run | inc contact		"snmp-server contact" includes AISD Asset Tag Number.
sh run | inc snmp-server location		"snmp-server location" includes portable ID, classroom# and classroom phone number
Check Optical levels	show interface transceiver	Document output Make sure the G0/27 links Optics Power Levels are within the normal range.
SSH to the device	Check SSH connection	While you are in the device console, enter command "ssh 10.xyz.240.1nm", provide the user name contractorID1's credentials. Note that you only need the password if you already logon the switch.
Connectivity Testing (Wired)		Connect your laptop to an access port in VLAN305, verify that the laptop gets a DHCP address, and can access the network.
Connectivity Testing (Wireless), if there is AP in the portable classroom.		Set your laptop to connect to AISD wireless network guest. Verify that the laptop gets a DHCP address, and can access the network via wireless.

NOTE: If you need to start over from scratch and reload a completely new configuration on a Cat3850 or 2960, the following commands may be used to thoroughly delete the current configuration and return to factory defaults.

Switch# **erase startup-config** ! *Will not* erase VTP/VLAN info, or crypto. *See below.*

Switch# **delete flash:vlan.dat** ! Removes the VLAN.DAT file to delete all VTP and VLAN info

Switch(config)#**crypto key zeroize rsa** <switch hostname>**-rsakey** ! Erases crypto key

6 Credentials for Contractor

SSH credentials:
Username:your ACS user name
Password: your ACS password

Device credentials:
Enable password: cisco
Console password: cisco